FEMALE END VIEW	SUGGESTED PANEL CUT OUT
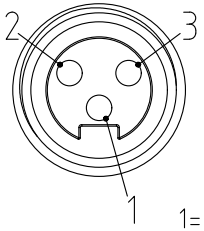 1=GN/YE 2=BN 3=BU	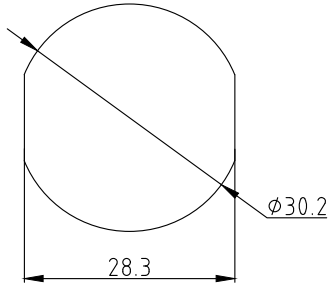

SPECIFICATIONS	
CONTANCT CARRIER MATERIAL/COLOR	TPU/BLACK
CONTACT MATERIAL/PLATING	BRASS/GOLD
HOUSING MATERIAL/PLATING	BRASS/NICKEL
O-RING MATERIAL	NBR
OPERATING CURRENT	9A
OPERATING VOLTAGE	600 V
CONDUCTOR INSULATION MATERIAL	PVC
NUMBER OF CONDUCTORS (AWG)	3 x 16 AWG
OPERATING TEMPERATURE	-25°C — +85°C
PROTECTION CLASS	IEC IP67

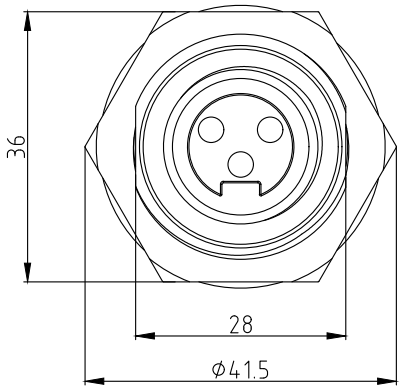

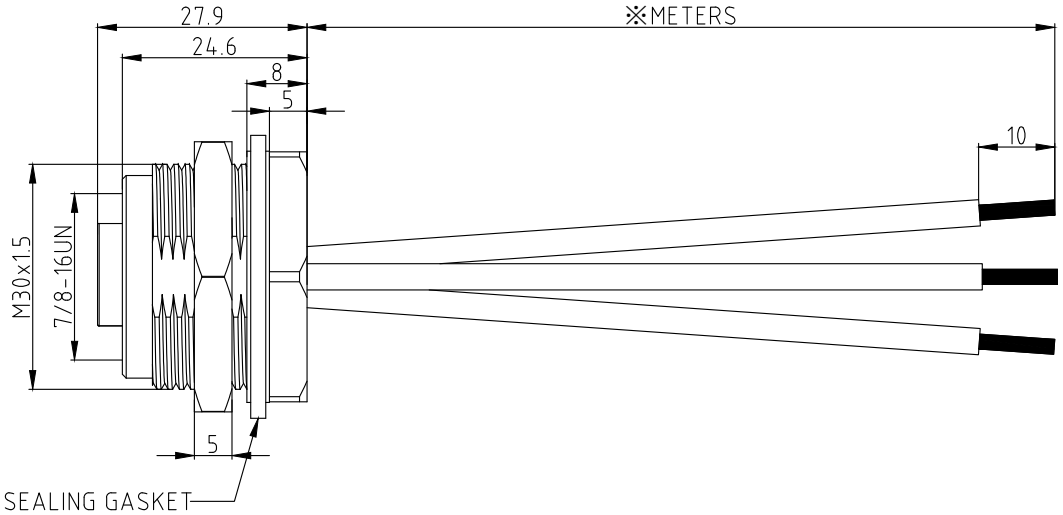

CABLE LENGTH	TOLERANCE
ALL LENGTHS	+4%(OR 50mm) OF LENGTH -0% (OR 0mm) OF LENGTH WHICHEVER IS GREATER
STRIP LENGTH	TOLERANCE
0 - 7mm	± 1.0mm
8 - 29mm	± 1.5mm
30 - 49mm	± 2.0mm
50 - 69mm	± 3.0mm
70 - 100mm	± 4.0mm
over 100mm	± 5.0mm

REV	COUNT	DESCRIPTION OF REVISIONS	BY	CHECKED	DATE

UNIT OF MEASUREMENT
MILLIMETER

Tianjin Geneuo Technology Co.,Ltd

Approved:
Date:

Date: 2019.2.2

Description: FMK31-※/M30

Process:
Date:

Scale: 1:1

Checked:
Date:

3RD Angle Projection

www.gsee-tech.cn
www.gsee-tech.com

REV A

Designed: WY
Date: 2019.2.2

SOURCE DRAWING-FOR REFERENCE ONLY